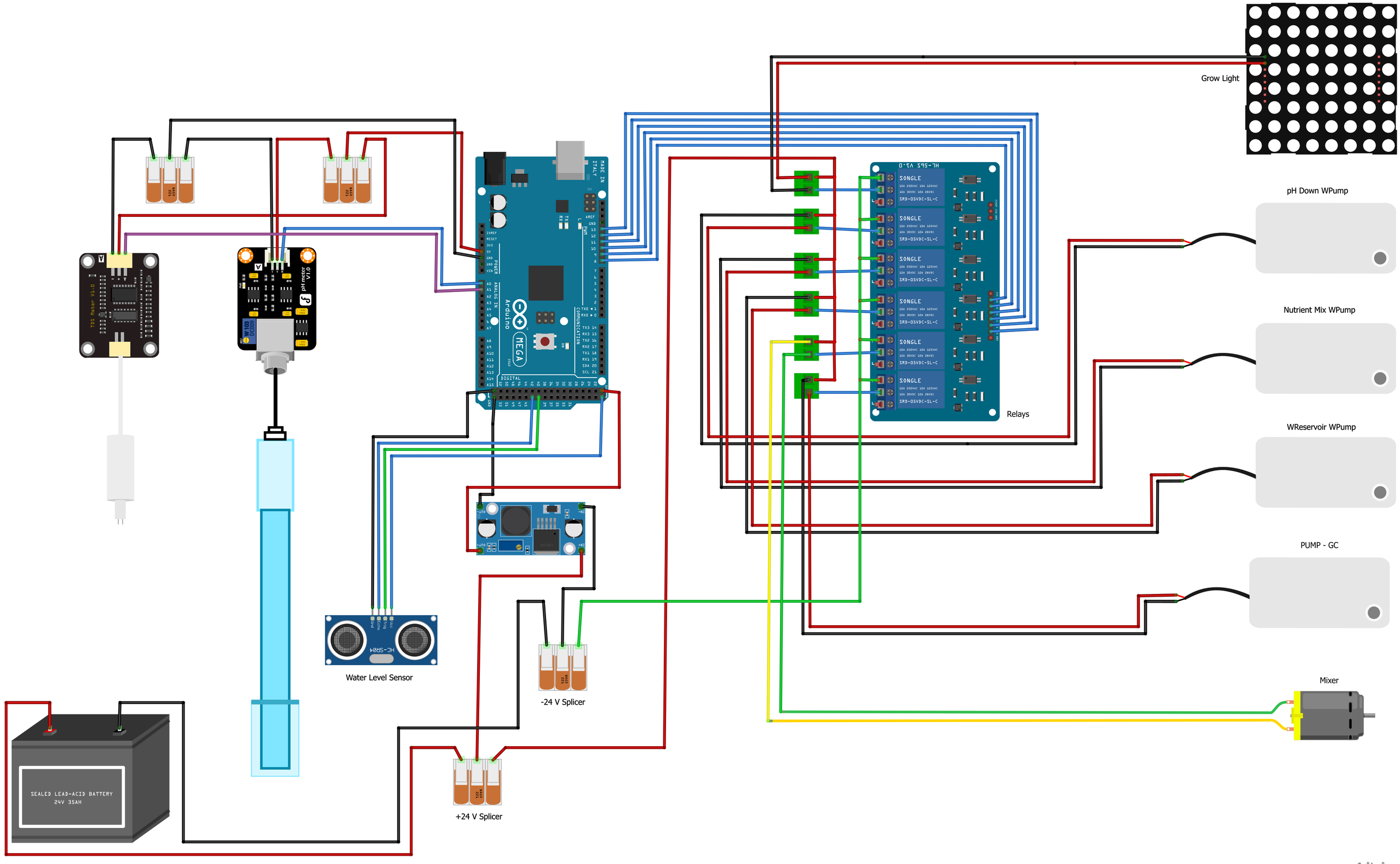
Grow Light
pH Down WPump
Nutrient Mix WPump
WReservoir WPump
PUMP - GC
Mixer
Relays
Water Level Sensor
-24 V Splicer
+24 V Splicer
SEALED LEAD-ACID BATTERY
24V 35AH
fritzing